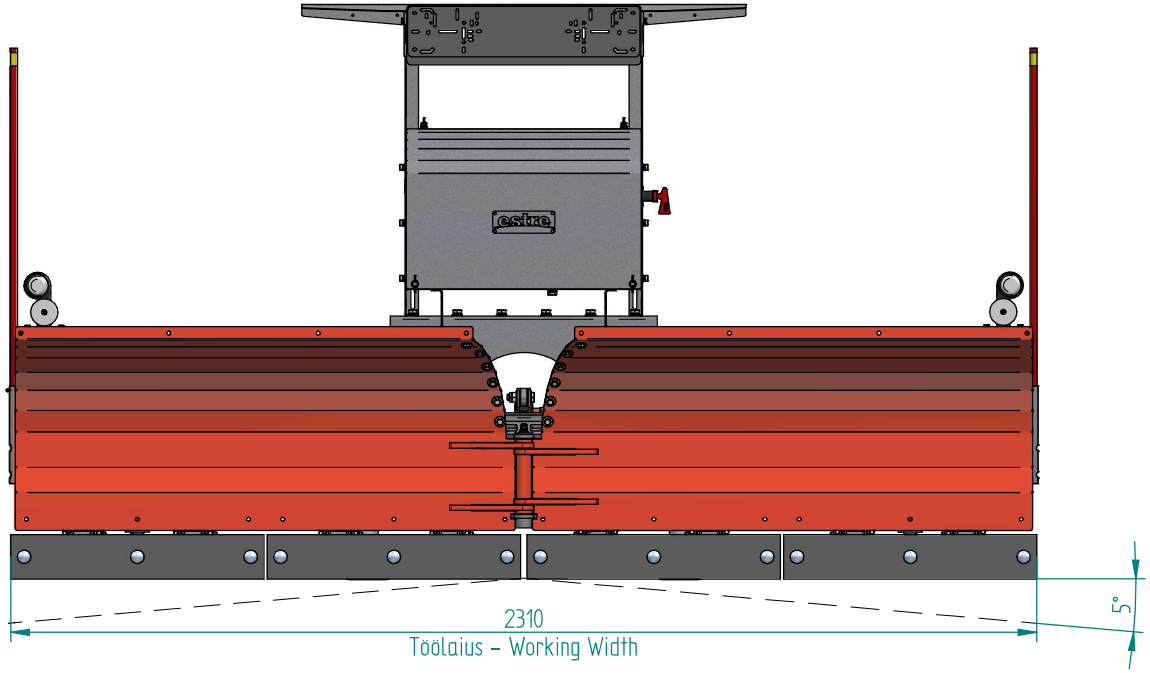

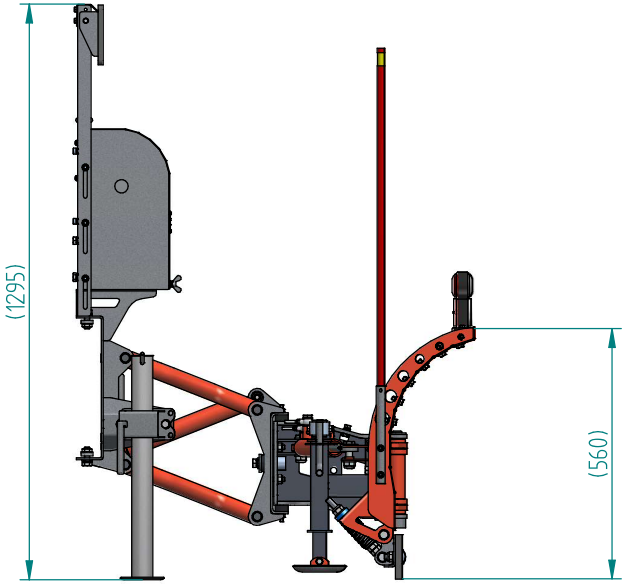

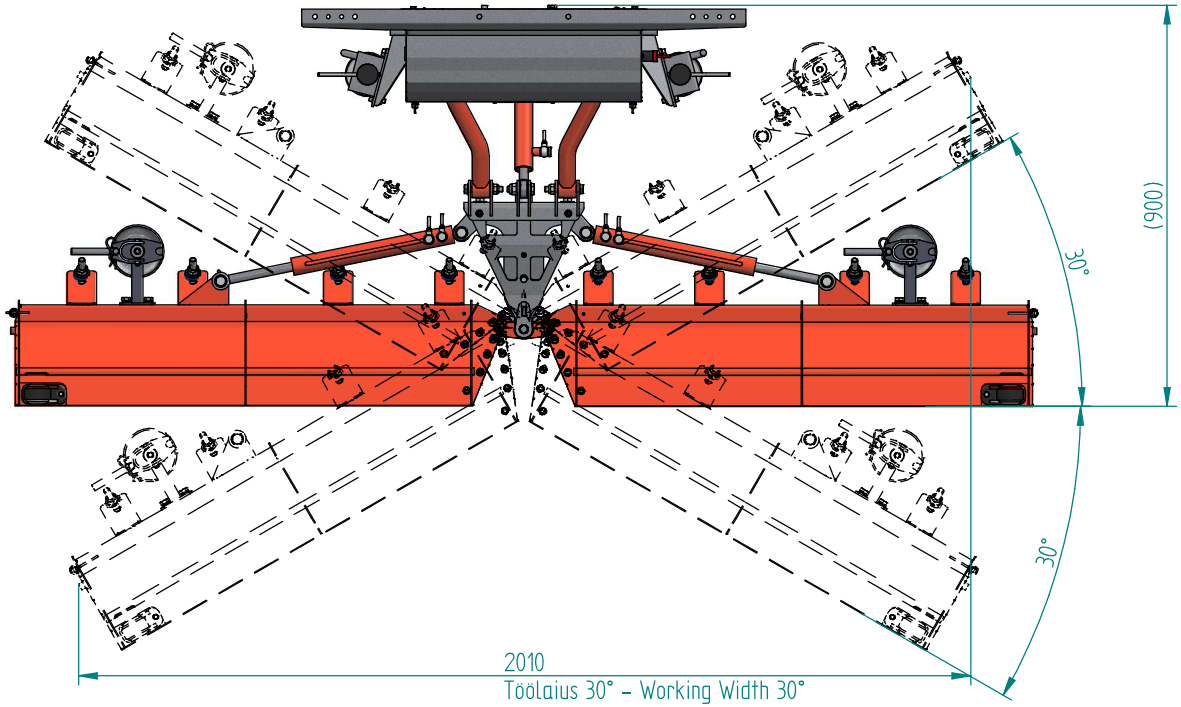

Specification

Wing moving time	2,8...3,2 sek (60 deg)
Wing turning	30 deg
Raising the wing	1,5...2 sek
Raising height	340 mm
Working width	2300 mm
Snowplow weight	149 kg
UNI frame (888699), weight	21,2 kg
Model based frame weight	18,6 kg
Blade Material	Hardox/PUR/ PE500

Materia / Material: Pinnakaredu		Mass / Weight:	Massa / Mass: 151 kg
Surface Roughness	Üldiné tolerants / Tolerance: ISO 2768-cL		
Pinnavõlimistlus / Treatment	Pinnakõvadus / Surface hardness	Muud. nr.	Mõõtmed / Dimensions: mm
Desig / Kontrolli: 29/06/17 martti	Name: V-sahk 2,3 m		
Design / Koostaja			
Approved			
estre	Leht / Sheet: 1 / 5	Joon. / Draw. No.: 240.00.00A	A2